ACTON®
FINISHING

Lesson 4

8 steps to optimise your surface finishing process

Introduction

Surface finishing technology, such as Vibratory Finishing machines or Centrifugal Disc Finishing machines, will reduce processing times and will enable you to produce a repeatable and quality finished product, in comparison with manual finishing.

However, a finishing system that is poorly optimised can affect your production output targets and can increase operational costs and cost per part. This applies for new and refurbished surface finishing systems.

With this in mind, we have designed the **"8 Steps to Optimise Your Surface Finishing Process"** eBook, where we talk about the ways you can optimise your surface finishing system through mass finishing accessories and minimum operator intervention.

Optimising your surface finishing system

Weather you use vibratory finishing or centrifugal disc finishing, a big part of the operations involved in the finishing process are carried by your employees. From loading and unloading the parts into / from the machine, to dosing the water and compound mix into the finishing machine and checking the progress, you will probably involve a few workers in the finishing process.

So probably your next question would be, how do I control the finishing process and get a repeatable result with minimum operator intervention? The key is to know the finishing process parameters and to determine which steps can be automatize.

Do you find it difficult to separate parts from media at the end of the finishing process? Consider a finishing machine with a separation system. Do you need to process different parts using different medias in the same time? You can install divider plates. Do you need to monitor the compound and water flow during the finishing process? Look into installing a dosing unit. These are just a few of the most basic accessories which can help you to optimise your finishing system and reduce operational costs.

1. Install a dosing unit to reduce wastage & save costs

The diaphragm dosing pump (or **Dosing Unit**) controls the liquid compound flow rate dosed into the finishing machine. The pump is usually wired through to the start button of the finishing machine, making it easy to control.

Some benefits of the Dosing Unit include:

- Accurate control of the liquid compound usage
- Reduced compound wastage
- Consistent finish
- Extending the media life
- Keeping the work bowl of the machine and parts clean
- Saving costs

Depending on your requirements you can choose between:

- a floor-mounted unit
- a wall mounted unit
- or a dosing pump (great for finishing machines with small batch works capacity such as ActOn Finishing **Bench Mounted Series**)

2. Save time with parts/ consumables conveyors, hoppers and feeders

When you have a daily/ monthly output target to achieve, time wasted with jobs such as manually loading parts / media into the finishing machine or replenishing the worn media is not an option. Instead you can automate your finishing system by installing a:

- Parts and media conveyor
- Media hopper or feeder
- Powder feeder

The role of the **Parts and Media Conveyor System** is to carry the parts and / or media from one machine to another. For example, parts can be transported from a parts feeder into the vibratory machine via a conveyor. Or you can use a conveyor to transport the parts, after being finished in a disc finishing machine, from the vibratory separator to the parts collection tray.

The advantages of the conveyor include

- Reduced manual handling;
- It delimits parts, protecting them from impingement when fed into the machine.

2. Save time with parts/ consumables conveyors, hoppers and feeders

The role of the **Top Up Media Hopper or Feeder** is to replenish worn out media at set intervals. As the level of media reduces in this hopper, a signal is sent to the operator.

Benefits of using the top up media hopper:

- It ensures the media to parts ratio is maintained in the machine, thus giving consistent results.
- It allows you to control the level of media in your vibratory finishing / centrifugal disc finishing working bowl with minimum reliance on operator.

The **Powder Feeder** is nothing else but a time controlled hopper with an electrically controlled valve that dispenses powders into the finishing machine. For example, separating compound can be fed into the machine automatically for every batch of components being processed to reduce the risk of any human error.

Tricks for using the Powder Feeder

If the parts you are processing are small in size, the powder feeder can be adapted to feed the parts into the finishing machine.

Batches of parts, that are being uploaded in the finishing machine, can be controlled by a set weight.

3. Choose a separation system to separate parts from media with minimum operator intervention

A **Separation System** enables you to separate the parts from media at the end of the finishing process. Depending on the vibratory finishing / disc finishing system you own, you can choose between:

- Integrated Separation System for Vibratory Finishing Bowls
- Independent Vibratory Separation System for Vibratory Finishing Troughs or Centrifugal Disc Finishing systems
- Magnetic Separation System

The **Integrated Separation System** comprises of a polyurethane flap with handle. Post process, the separation flap is engaged manually or pneumatically, and hence forms a bridge that assists parts to travel onto the separation screen while the machine is still vibrating. The media is then screened through the separation screen (holes or slots) and is retained in the bowl, whilst the parts exit from the machine.

Tips for separating the undersized media

Undersized media can be discharged through the separation system by having an undersized media grid incorporated within the separation system. The discharge of the undersized media can also be made through a specially designed door which is placed at the bottom of the work chamber while the finishing machine is running.

3. Choose a separation system to separate parts from media with minimum operator intervention

The **Independent Vibratory Separation System** is a standalone unit. It includes a large separation screen and has its independent drive system.

Upon completion of the process, parts and media are slowly fed into the vibratory system and are separated via the screen.

We recommend using this accessory for equipment where there is no other separation system included, such as trough finishing machines or centrifugal disc finishing equipment.

Benefits:

- The vibratory separation system can easily be integrated into a fully automated finishing system.
- ActOn separation screens are made out of polypropylene and the sizes of holes and slots can be manufactured depending on the geometry of the part being processed and the type of media used.
- Like in the case of the Integrated Separation System, undersized media separation system can be incorporated.

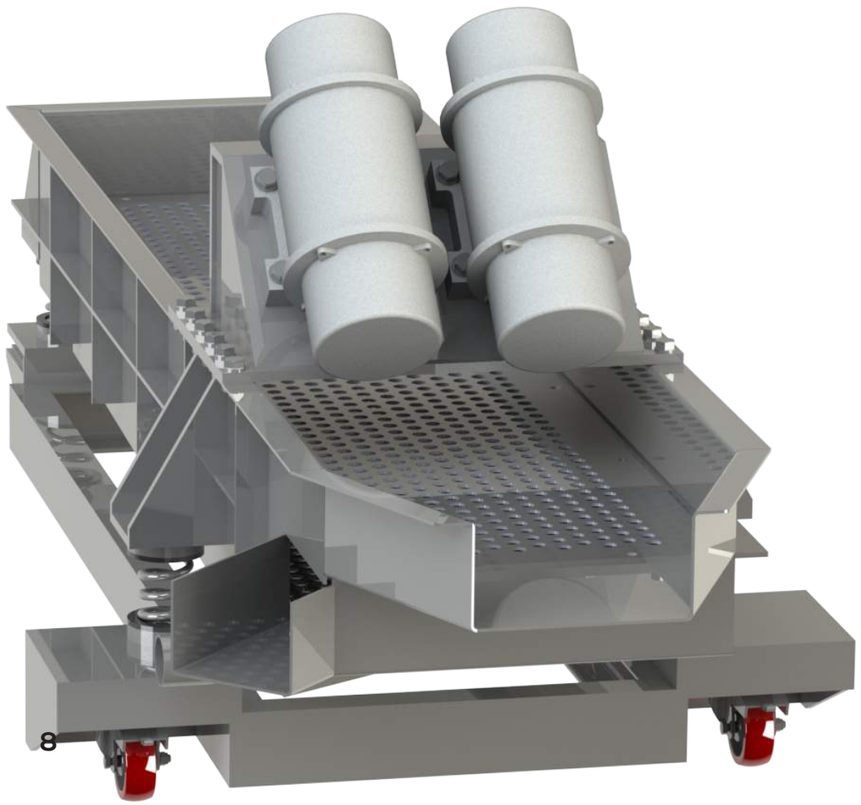

The **Magnetic Separation System** offers full control of process with minimum reliance on the operator. This accessory separates the components from media via an overband electro-magnetic separator.

The Magnetic Separation System is great for ferrous components, where parts and media are of a similar size, by which standard separation is not possible

The process of separation and demagnetisation is automated, giving the required control of process. ActOn Magnetic Separation Systems are designed with a higher ramp, allowing smaller parts to be separated magnetically.

As an example, parts can be magnetically separated from an **M series** machine (ActOn vibratory bowl machine) and fed into a **VBD machine** (ActOn dryer). Or you can use a **Magnetiser** to separate parts from media after these have been processed in a **DTB-50** disc finishing system.

4. Use divider plates to process delicate parts

The work chamber of a trough or bowl machine can be sub-divided using **divider plates** to provide separate compartments for precision or delicate components, yet providing a highly efficient machine capable of batch processing.

Benefits of using divider plates

- It ensures there is no impingement between parts when being processed.
- You can use different types of media in each chamber to carry different finishing processes in the same time
- You can mass finish different parts in each chamber in the same time

Did you know that ActOn Finishing manufactures divider plates for Vibratory Bowl Finishing machines as well? Find out more here.

5. Collect the finished parts using a Components' Collection System

You can integrate a **Rotary Table** in your finishing system to collect the parts after being processed.

Benefits of the rotary table:

- Pushes parts to the middle away from the unloading chute of the machine, therefore reducing impingement.
- Provides an ergonomic surface from which the operator can sort and collect the parts into their respective containers.

Or you can collect the finished parts using a **Portable Unload Cabinet.** The cabinet can be lined with acoustic foam, to reduce noise when parts are being collected. This removes the need for the operator to be there immediately post-completion of the process and facilitates the collection of finished components ergonomically and efficiently.

6. Use a Waste Water Treatment System to Facilitate Recycling & Reduce Processing Costs

Recycling processed water is an environmentally friendly and a cost-effective water treatment method as it allows the user to recycle the water and compound.

At the end of the mass finishing process, the effluent is discharged from the finishing machine to the centrifuge via gravity or transported with a pump. The solids are then separated from the solution. The clean solution, which contains water and compound, is pumped back into the finishing machine

However, there may be cases when recycling of processed water is not possible. This may occur when:

- An acidic compound is used in the mass finishing process.
- Several compounds are used in the process.
- Component surface requires a certain degree of cleanliness at all times.
- Components manufactured from different materials are mass finished.

In these cases, the effluent may have to be discharged to the drain post-treatment in a centrifuge, which requires the addition of flocculants.

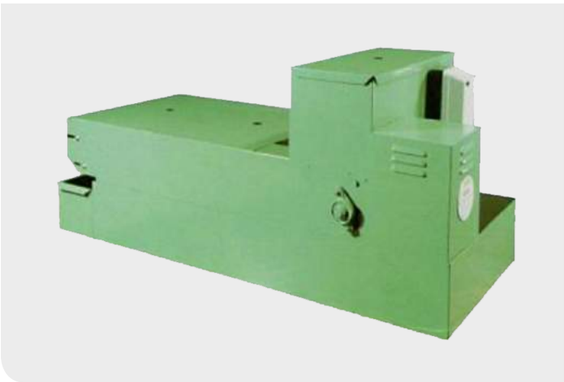

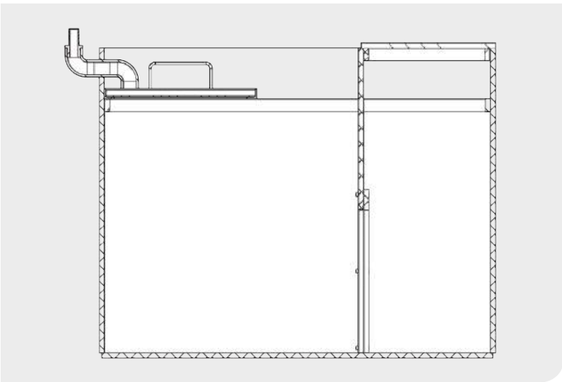

To treat the effluent before discharging it or recycling it you can choose between the following accessories:

a. Batch and Automatic Centrifuge

Designed to work in the most effective manner to treat the discharge water from mass finishing - either suitable for recycling or discharge to the foul drain as dictated by the process. The solids are captured in the basket of the centrifuge and then disposed of based on country specific regulations.

b. Settlement Tank

The **settlement tank** is connected to the drain of the finishing machine and the effluent is discharged from the vibratory machine into this tank. Baffle plates assist settlement. Solids that settle out in the tank chamber can then be removed with ease by the operator with the removable baskets.

c. Paper Band Filter

Separates the solids from the effluent discharged from the vibratory and grinding machines via a filter paper.

The discharged process water is transferred via a flow dispenser into the filter paper bed. The effluent passes through the filter paper which captures the contaminated sludge. The filtered water flows through the clean water-tank. From here, this can be discharged to the mass finishing equipment or discharged into the drain as per process.

d. Recirculation Tank

The chemical recycling tank is a cost-effective accessory that ensures the optimum usage of chemical compounds by continuously recycling the compound back into the vibratory finishing machine. A combination of pump and valves control the recycling process. Based on the mass finishing application, the tank will need to be emptied and topped up after a period of time.

7. Collect the fine dust from the vibratory drier using an economical and effective solution

After the wet finishing process some parts require a drying stage, to remove any moisture and avoid staining. If you choose to dry these parts in a vibratory dryer / dual finishing machine, we recommend using a **Dust Extractor** to collect the dust that results from finishing process.

Benefits of the Dust Extractor:

- It is easy and quick to install
- Compact design
- Minimises floor space and fits in virtually any plant layout
- Depending on your requirements you can choose between a standard version or with explosion relief system
- Quiet & efficient in operation
- Easy to maintain
- Lower operating and energy costs
- Implies lower capital cost
- Minimise the safety hazards

8. Use a Control System to Ensure Process Control and Repeatability

We recommend the usage of a suitable **Control System** to suit the functionality of the finishing machine you own. The control system you choose can be operated via a push button system or via a touch screen using PLC control systems.

Control Panels can be customised to have:

- Light and sound indicators,
- Speed controls,
- Direction controls
- Door, lid and flap controls.

Did you know that at ActOn Finishing most of the standard finishing machines come with a standard control panel with a timer facility to set the process time?

For more complex finishing processes we recommend **PLC and HMI Controls**. Like the Control Panel, these type of controls can be customised to include:

- Time settings
- Cycle start
- Cycle stop
- Recipes
- Maintenance schedules
- Vibratory separator controls
- The machine operation can be secured with an operator password.
- Fully control of a complex finishing system

All of these options (of the Control Panel and PLC and HMI controls) will enable you to automate your finishing system and it will ensure process control and repeatability.

Examples of how you can optimise your vibratory finishing technology

1. Auto Deburr & Polish System

This system incorporates 2 vibratory bowl finishing machines with a pneumatic unload system and it has been designed for customers manufacturing a variety of tools to suit the layout and operation.

The first machine has a clockwise unload, while the second one has an anti-clockwise unload. The height of both machines has been adjusted to enable components being unloaded from the first bowl into the second one.

The design of the system enabled the customer to carry out a 2 stage process with no operator intervention.

Left Hand Configuration
Process time is set for this machine to deburr the parts. At the end of the process, the machine stops and reverses the media and components to allow the separation flap to engage - thus ensuring no entrapment of parts and media under the separation flap. A complete unload and separation of parts from media is achieved automatically and components are discharged to the next sequence of the process.

Dosing Unit
(Floor-mounted or wall-mounted).

PLC
To fully automate the system, including control of recipes.

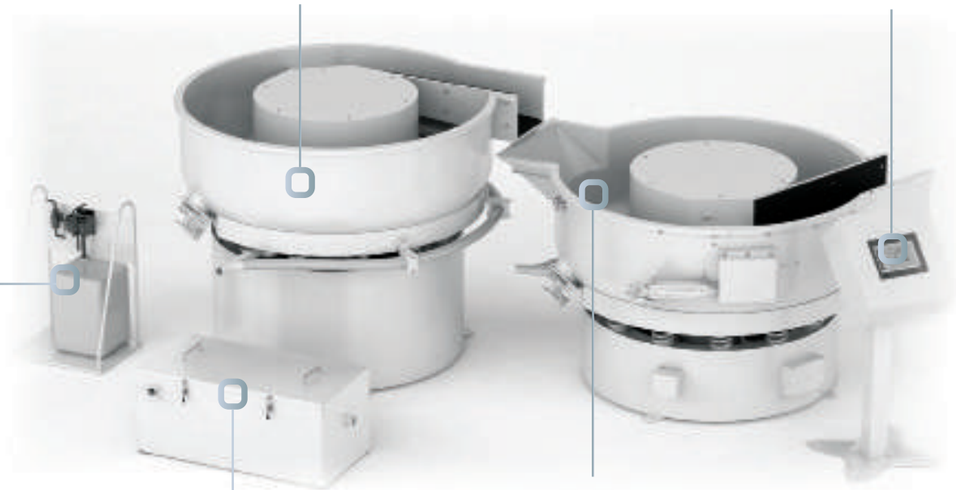

Settlement Tank

Right Hand Configuration
Upon completion of the polishing process the separation flap is engaged pneumatically, allowing vibration to unload the parts over the separation screen. The media falls through the separation screen and returns into bowl, while the parts are unloaded from the machine and suitably collected.

Advantages

- ✓ Customised design.
- ✓ Auto functionality helps carry out production out of hours.
- ✓ Multiple process stages.
- ✓ Full control of process with minimum reliance on operator.
- ✓ Suited to small and large volumes of parts.
- ✓ Can be used as a continuous or batch system.
- ✓ Savings in operating costs.

2. Top Up and Dewatering System for Automotive Part Application

This system has been designed to ensure 100% discharge of media and parts at the end of the process. On completion of the process, the pneumatically operated door on the bowl machine opens to allow for all the contents from the bowl to be discharged fully.

Advantages

- A fully automated system designed and manufactured to ensure process control and repeatability.
- The system is built to offer minimum reliance on operator

Vibratory Parts Feeder with Weight Control
Ensures excessive parts are not loaded to the process.

Vibratory Bowl
Specially designed with a pneumatic door for complete discharge with a semi-hinged acoustic lid.

Parts and Media Conveyor
Used to convey the parts to the bowl and also serves as a media return conveyor.

PLC and HMI Controls
Controls all equipment and process in the system from start to finish. Alpha-numeric part number specific recipes can be programmed. Maintenance schedules with alarms programmed for preventative maintenance. All password protected.

Vibratory Separation System
Separates media from parts.

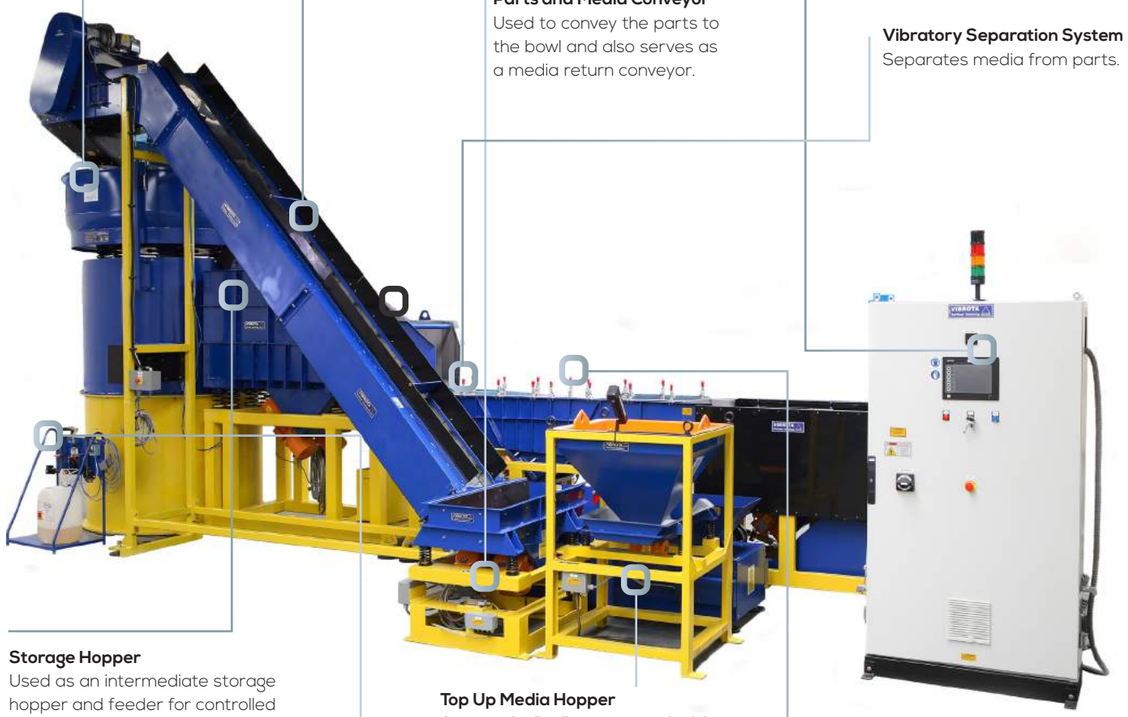

Storage Hopper
Used as an intermediate storage hopper and feeder for controlled feed to separation system.

Incorporates a drain for discharge of residual effluent.

Top Up Media Hopper
Automatically dispenses replenishment media based on wear rate.

Dosing Unit
(Floor-mounted or wall-mounted).

Dewatering Screens Feeder
Incorporates a recirculation tank with pump and special spray system on the feeder for enhanced protection of the parts.

Example of how you can optimise your centrifugal disc finishing technology

DTB-50 Finishing System with Automatic Magnetic Separation

This ActOn Disc Finishing system is unique in design and meets the highest standards required by industry. The design allows continuous output: while the finished batch of components are separated from media and discharged, a new batch is being processed in the disc finishing machine. The process is fully automated and controlled from the point of parts being processed to the discharge of the parts.

Due to the size of components and media being very similar, parts are separated 100% magnetically and are demagnetized prior to being discharged in the collection tray.

DTB-50 Disc Finishing Machine

Recommended for processing small to medium batches of parts. One of the main advantages of Centrifugal Disc machines is the reduced processing times for most applications. The features of the DTB-50 include:

- Polyurethane lined barrel to ensure fabrication is protected and parts are processed in an effective manner.
- Stress relieved work chamber to improve life.
- Disc can be adjusted manually or automatically
- Powerful heavy duty speed drive.

Parts Hopper

The parts hopper allows for the parts to drop into the parts collection tray without spilling.

Demagnetiser

Once the parts have been magnetically separated, they need to pass through a demagnetiser to remove the magnetic field created through them.

Air Knife

This aids in drying the parts coming out of the wet process, thereby preventing them from sticking to the conveyor due to the surface tension of the water.

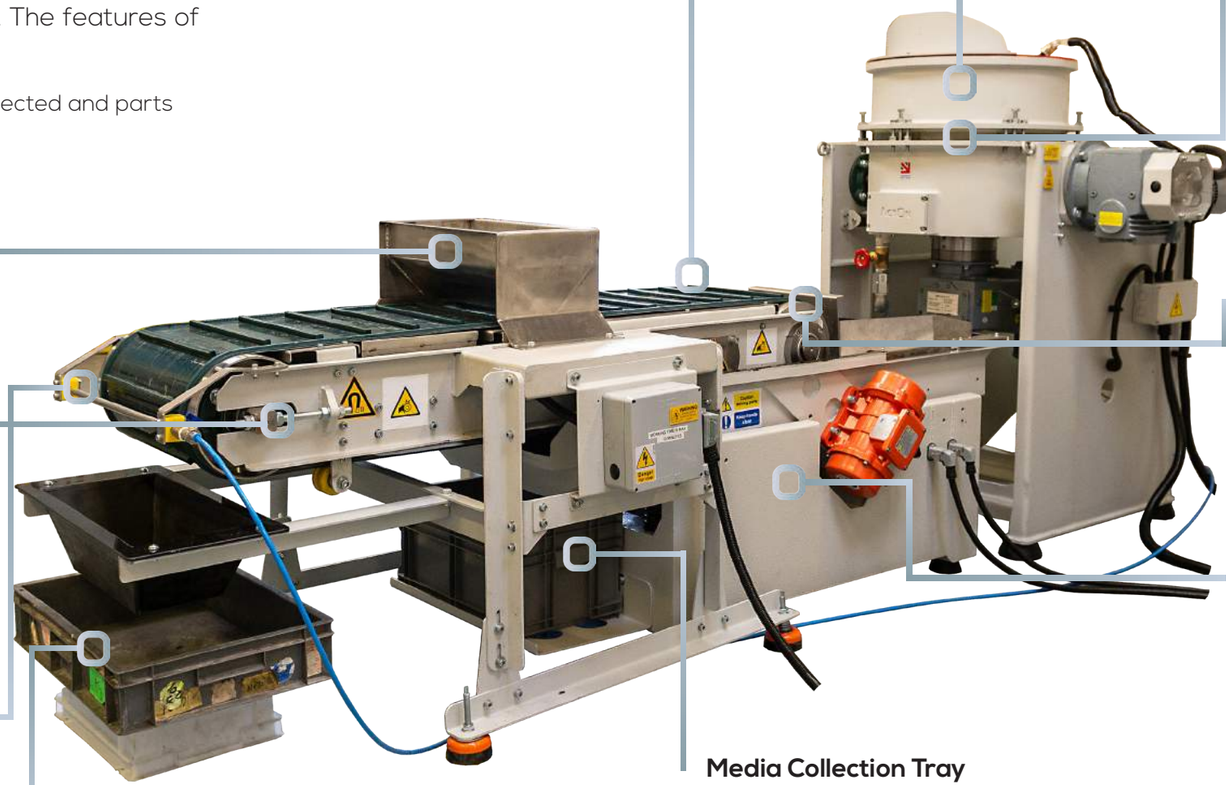

Parts Collection Tray

The parts collection tray enables the components to be collected into a removable and replaceable tray, which can then be used to take the parts for final stages/ packing.

Advantages

- Equipments configuration results in seamless and controlled processing
- Operator intervention is minimal
- Measured throughput to avoid excessive loading & controlled process
- Repeatable process via recipe control
- Customised to user requirements
- 100% separation of parts and media

Parts Conveyor

Conveys the parts from the vibratory separator to the parts collection tray through the demagnetiser.

Gap Area

Specially designed gap area between the disc and the working barrel, for particular finishing applications. The geometry of the gap area is crucial for an improved life of the disc finishing machine.

Gap Area Adjustment

During the finishing process the width of the gap area can be adjusted automatically through the disc finishing machine controls.

Magnetic Separation System

Allows separation of parts from the media after the finishing process. While media & compound mix go through the vibratory separator, parts are carried through the parts conveyor. The process of separation and demagnetisation is automated giving the required control of process .

Vibratory Separator

Allows for the separation of media and compound and water mix. The vibratory separator also enables the separation of undersized media, before the media can be collected into the collection tray for further use.

Media Collection Tray

The reusable media discharged after the finishing processed and separated in the vibratory separator, is then collected in the media collection tray for easy transfer back into the machine for the next finishing process.

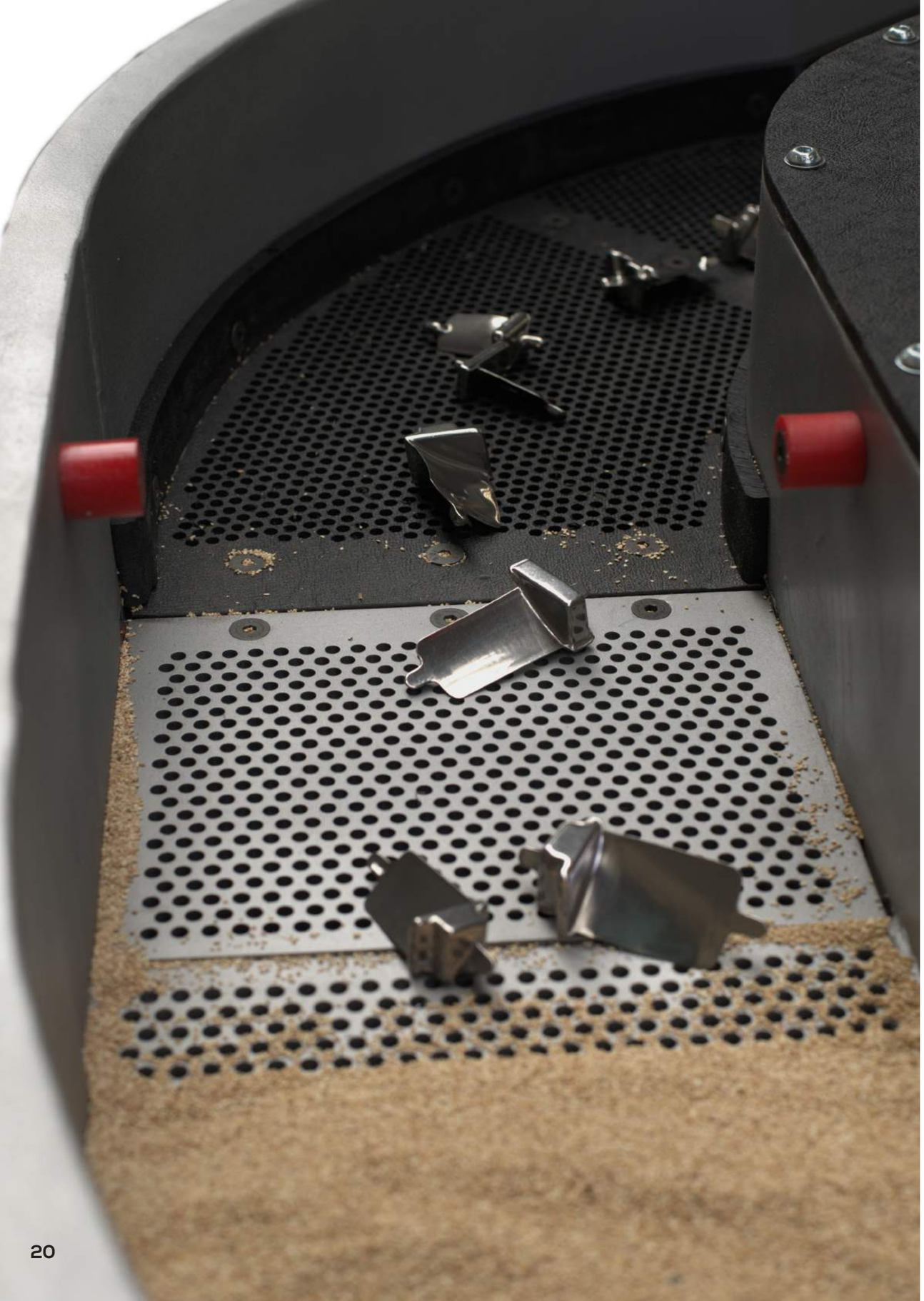

The outcome

Now that you know how to optimise your surface finishing technology, you would probably wonder what's the cost of doing this? The reality is that we can't give you a real figure, as this will depend on your finishing requirements. You might need to invest from a few hundreds of pounds to a few thousands. However what you need to understand is the outcome of your investment.

Automating your finishing system via mass finishing accessories will help you:

- **increase your productivity**. No more process changes or machinery downtimes and no more time wasted by your employees trying to control the finishing process.
- **achieve a repeatable and high quality finish every time**. Once you automatise the finishing process, there is no need to carry out rework and you avoid high part rejects rates.
- **reduce processing times**.
- **save money that you would otherwise spend on labor.**

Outro

Ready to apply everything you learned? Great. Armed with your newfound knowledge of mass finishing accessories, it's time to dive into the challenge of optimising your surface finishing technology.

To help you along the journey and make sure you keep on track, our specialists with decades of experience in this field are available to answer your specific questions in mass finishing. You can contact them via email at sales@acton-finishing.co.uk or call at +44 (0) 24 7646 6914.

Good luck!

About ActOn Finishing

ActOn Finishing Ltd is UK's leading expert in designing and developing the state-of-the-art machinery and finishing solutions of tomorrow.

Established in 1965 as a UK leading family business, we've worked hard to design, develop and manufacture a product of high British standard that will redefine your work.

We cater to a range of industries including Aerospace, Medical, General Engineering, Hospitality, Automotive and Additive Manufacturing.

Our products and services include:

- Vibratory Machines
- High Energy Machines
- Fully Automated Systems
- Waste Water Treatment
- Finishing Consumables
- High Energy & Vibratory Finishing Services
- Shot Blasting & Peening
- Precision Polishing
- Equipment Installation,Training & Maintenance
- Polyurethane Lining, Repair & Spare Parts Service

While our head office, manufacturing facility and subcontracting facility are located in Coventry, U.K., our shot blasting and peening facility is based in Stourbridge, U.K.

Our ActOn Stourbridge facility, offers the widest range of shot blasting in the West Midlands and it has a reputation for high quality services and quick turnaround time. Our specialists with decades of experience in this field are always available to answer your questions and provide you with quality and cost-effective solutions.

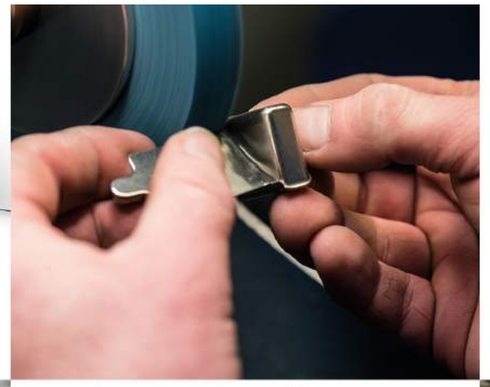

Quality You Can See

We pride ourselves on our excellence, and over the years we have successfully demonstrated an ongoing compliance with ISO quality and environmental standards.

For ISO, we currently hold:

LLOYD'S REGISTER • LRQA
ISO 14001
UKAS MANAGEMENT SYSTEMS 001

LLOYD'S REGISTER • LRQA
ISO 9001 • AS 9100
UKAS MANAGEMENT SYSTEMS 001

MADE IN BRITAIN

We're proud members of the 'Made in Britain' campaign.

we redefine

ActOn Finishing Limited
213 Torrington Avenue
Tile Hill, Coventry, CV4 9HN.
United Kingdom.

+44 (0) 24 7646 6914
sales@acton-finishing.co.uk
www.acton-finishing.co.uk